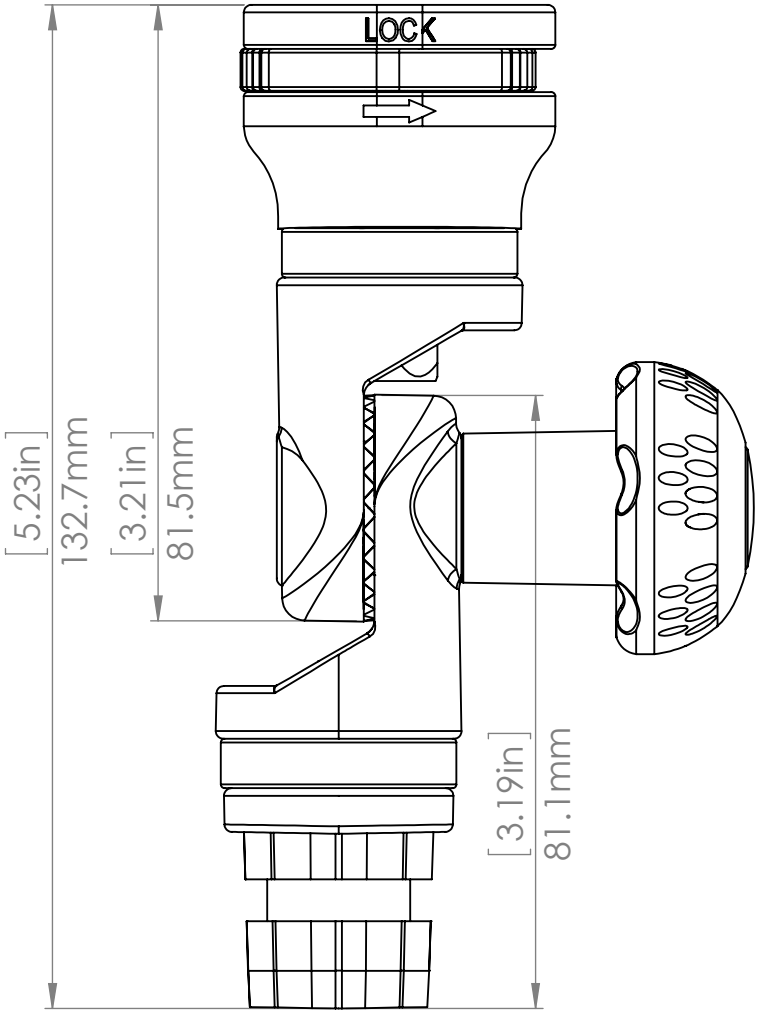

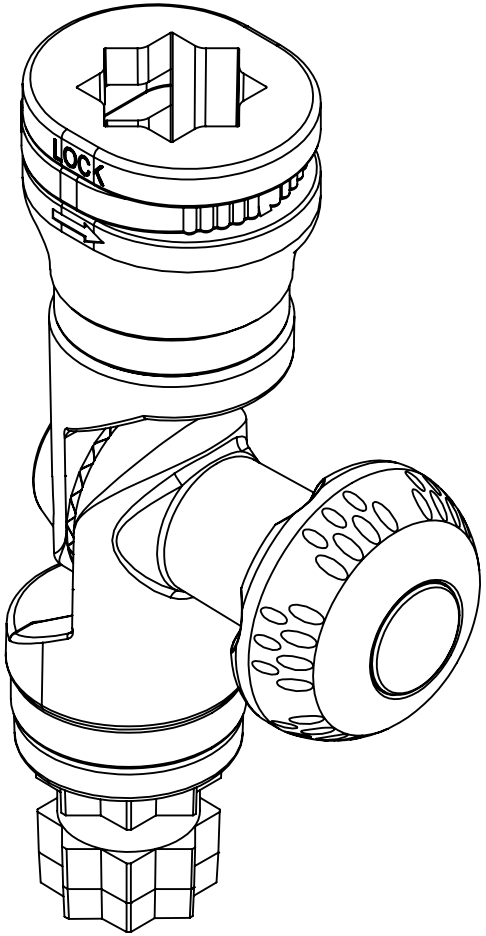

RAILBLAZA®
HOLD EVERYTHING...

Copyright RAILBLAZA LTD. 2015