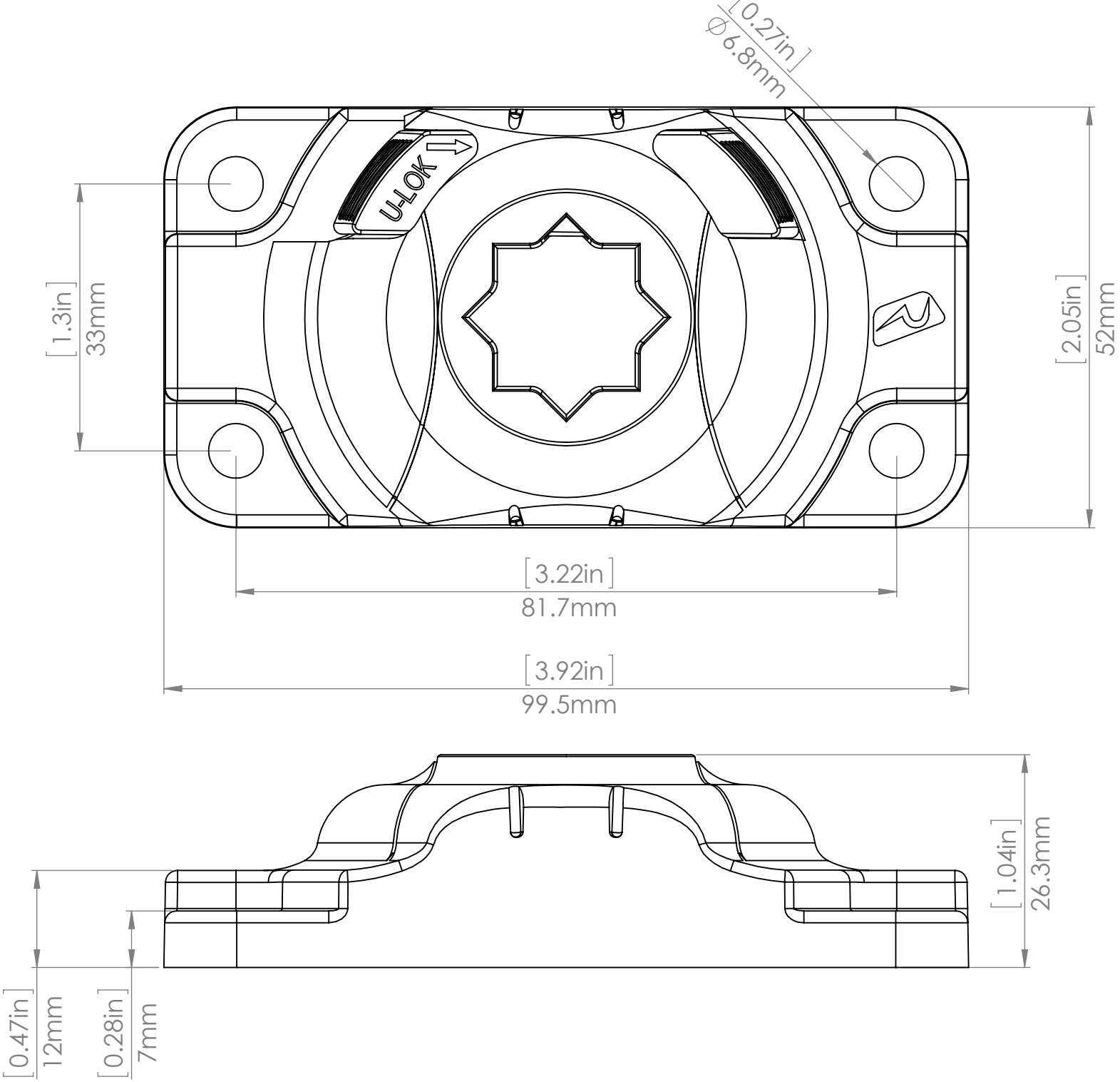
[0.27in]
Ø6.8mm
U-LOK
[1.3in]
33mm
[2.05in]
52mm
[3.22in]
81.7mm
[3.92in]
99.5mm
[1.04in]
26.3mm
[0.47in]
12mm
[0.28in]
7mm